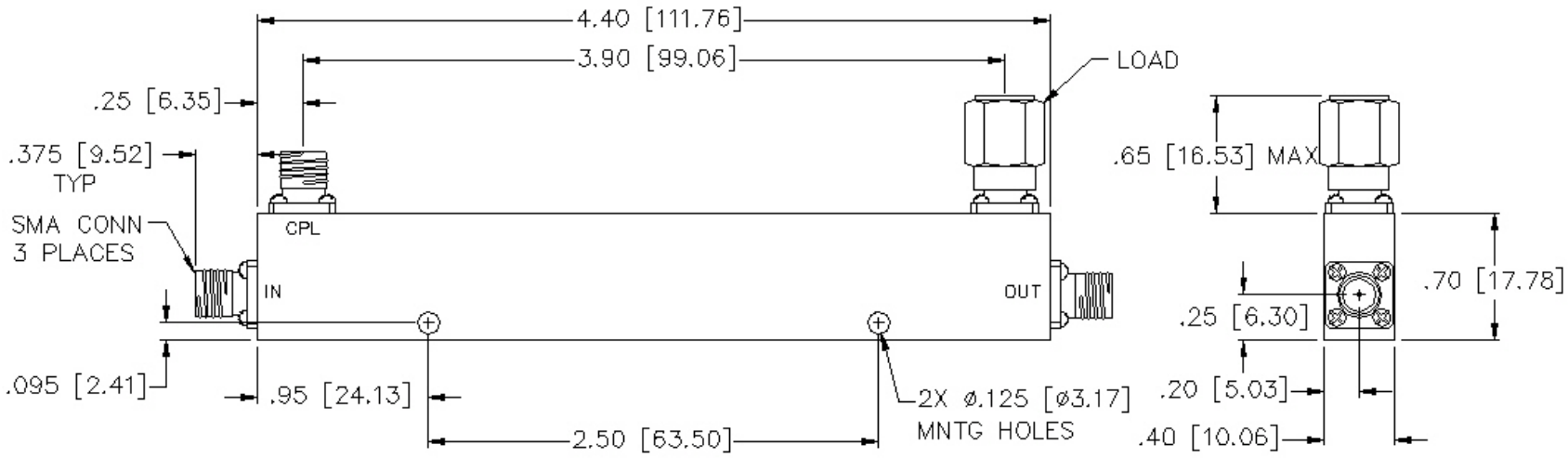

SPECIFICATIONS

Frequency Range:	0.5 - 18.0 GHz
Coupling:	30.0 ± 1.00 dB
Insertion Loss[1]:	0.90 dB Max
Coupling Flatness:	± 1.00 dB Max
Directivity 0.5 - 12.0 GHz:	15 dB Min
Directivity 12.0 - 18.0 GHz:	12 dB Min
VSWR:	1.50:1 Max
Power Input:	25 W Max
Power Reflected:	25 W Max
Power Peak:	3 kW Typ
Connector Type:	SMA

Notes:

Device tested in a 50 Ohm system.

1. Does not include coupling loss.

PULSAR MICROWAVE CORPORATION

PULSAR MICROWAVE CORPORATION
48 INDUSTRIAL WEST, CLIFTON NJ 07012
TEL: 973-779-6262 FAX: 973-779-2727
WWW.PULSARMICROWAVE.COM

DESCRIPTION : Directional Coupler

MODEL NO. : CS30-23-436/20

DIMENSIONS ARE IN INCHES
DECIMAL TOLERANCE:
2 PLACE ± .02
3 PLACE ± .010

SIZE	CAGE CODE :	REV CODE :
A	0HR85	

SCALE : N / A

ALL SPECIFICATIONS ARE SUBJECT TO CHANGE WITHOUT NOTICE AT ANY TIME

SHEET 1 OF 1