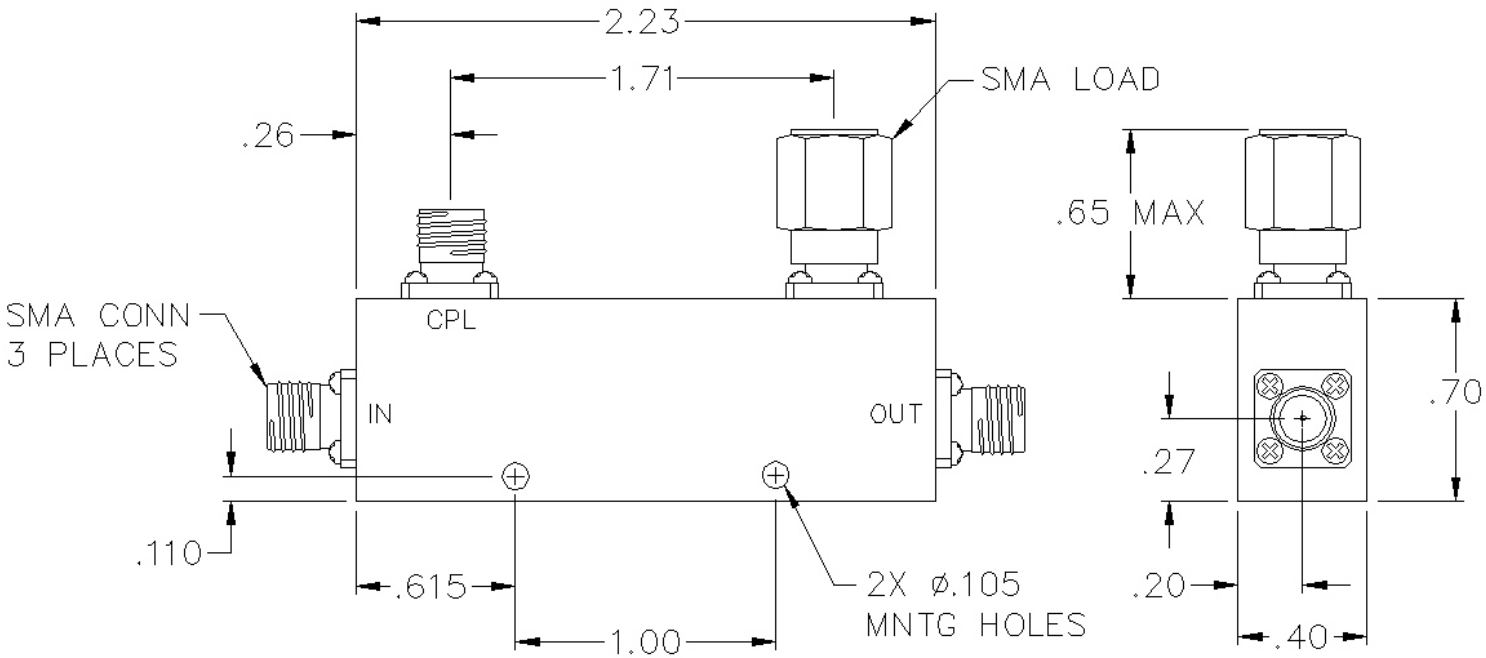


## SPECIFICATIONS

| | |
|---|---|
| Frequency Range: | 2.0 - 18.0 GHz |
| Coupling: | 30.0 ± 1.00 dB |
| Insertion Loss[1]: | 0.80 dB Max |
| Coupling Flatness: | ± 0.50 dB Max |
| Directivity 2.0 - 12.0 GHz: | 15 dB Min |
| Directivity 12.0 - 18.0 GHz: | 12 dB Min |
| VSWR: | 1.50:1 Max |
| Power Input: | 25 W Max |
| Power Reflected: | 25 W Max |
| Power Peak: | 3 kW Typ |
| Connector Type: | SMA |

Notes:

Device tested in a 50 Ohm system.

1. Does not include coupling loss.

PULSAR MICROWAVE CORPORATION
48 INDUSTRIAL WEST, CLIFTON NJ 07012
TEL: 973-779-6262 FAX: 973-779-2727
WWW.PULSARMICROWAVE.COM

DESCRIPTION : Directional Coupler

MODEL NO. : CS20-15-436/13

DIMENSIONS ARE IN INCHES
DECIMAL TOLERANCE:
2 PLACE ± .02
3 PLACE ± .010

SIZE A | CAGE CODE : 0HR85 | REV CODE :

SCALE : N / A | ALL SPECIFICATIONS ARE SUBJECT TO CHANGE WITHOUT NOTICE AT ANY TIME | SHEET 1 OF 1