RADITEK INC.

RoHS COMPLIANT

code-d7

Coaxial Isolator or Circulator, 17.5-41GHz, Split Bands
K (2.9) mm or SMA Connector, 2 Watts

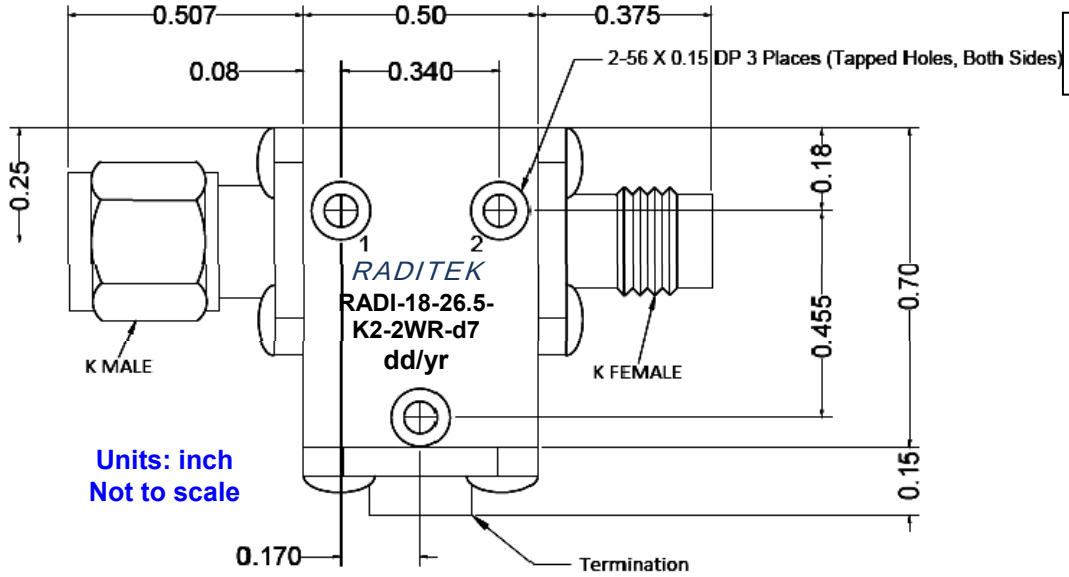

Isolator: 18.0-26.5GHz with K(2.9)mm Connectors

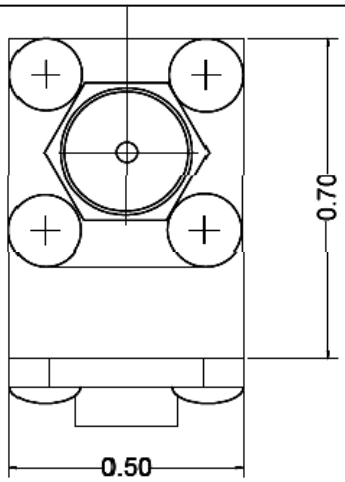

Direction of RF:	
R	Default ►
L	◄

Order Examples: RADI-18-26.5-K2-2WR-d7

I=ISOLATOR C=CIRCULATOR

SMA or K Connector options (X)				
Isolator			Circulator	
Port 1	Port 2		Port 3 Male	Port 3 Female
Female	Male	-1	-11	-21
Male	Female	-2	-12	-22
Female	Female	-3	-13	-23
Male	Male	-4	-14	-24

Material Specifications	
Connectors	Passivated Stainless steel
Contact Pins	Beryllium Copper, gold plate

Standard Frequencies:

Specifications:	Isol	Circ	Circ	Isol	Circ	Units
Frequency	18-26.5	18.0-26.5	18.5-30.0	18.0-40.0	18-40	GHz
Insertion loss	0.7 typ 0.8 max	0.8 max	1.5 max	2.10	2.10	dB
Isolation	18 min 20 typ	18 min	10 min	9	9	dB
VSWR	1.35:1 typ 1.40:1 max	1.40:1 max	2.0:1 max	2.10:1	2.10:1	
Power AVG Port(1-2)	5, 10	10, 20	5	2, 5	5	Watts
Power Reflective Term	2			2		Watt
Peak Power	30	30, 35	30	30	30	Watts
Connector	SMA or K	SMA	K	K	K	
Temperature range	-30 to +65	-20 to +65	-20 to +65	-20 to +65	0 to +85	°C
Weight	0.74 (SMA) 0.90 (K)	0.90 (SMA) 0.90 (K)	0.90 (K)	0.9	1.20	Ounces

WORLD HQ: 1702L Meridian Ave. Suite 127, San Jose, Ca 95125, U.S.A.
Tel: (408) 266-7404 FAX: (408) 266-4483
WEB: www.raditek.com E-mail: sales@raditek.com

Coaxial Isolator or Circulator, 17.5-41GHz, Split Bands K (2.9) mm or SMA Connector, 2 Watts

Specifications:	Circ		Circ		Model –M1	Isol	Isol	Units
Frequency	25.2-27.2	26-40	26.5-40.0	26.5-40.0	26.5-40.0	26.5-40.0	26.5-40.0	**GHz**
Insertion loss	0.6	1.0	1.0	0.8 typ. 1.0 max	1.0 max	1.0 max	1.0 max	**dB**
Isolation	20	14	14	14 min 15 typ	16 min	14 min	14 min	**dB**
VSWR	1.25:1	1.50:1 max	1.50:1 max	1.45:1 typ 1.50:1 max	1.50 max	1.50 max	1.50 max	
Power AVG Port(1-2)	10	5	5	2	5 or 10	10	5	**Watts**
Power Reflective Term		2		2	2	2	2	**Watt**
Peak Power	30	30	30	30	30	30	30	**Watts**
In/Out Impedance	50	50	50	50	50	50	50	**Ohms**
Connector	K	K	K	K	K	K	K	
Temperature range	-20 to +65	-20 to +65	-20 to +65	-30 to +65	-20 to +65	-20 to +65	-20 to +65	**°C**
Weight	0.75	0.4	0.9	0.9	0.4	0.7	0.9	**Ounces**

Additional Sub-Frequencies

Specifications:	Isolator	Isolator	Circ	Isolator	Isol		Units
Frequency	17.5-21.5	17.5-22.5	17.2-31.5	17.7-26.5	19.35-19.95	20.2-21.2	**GHz**
Insertion loss	0.6 max	0.5 max	1.5	0.8	0.5	0.4	**dB**
Isolation	20 min	20 min	9 min	18	22	22	**dB**
VSWR	1.25:1	1.25:1	2.10:1	1.40:1	1.25:1	1.20:1	
Power AVG Port(1-2)	2	10	5	10	10	10	**Watts**
Power Reflective Term	2	2		2	2	2	**Watt**
Peak Power	30	30	30	30	30	50	**Watts**
Connector	K	SMA	K	K	K	K	
Temperature range	-20 to +65	-20 to +65	-20 to +65	-20 to +65	20 to +65	-20 to +65	**°C**
Weight	0.9	0.9	0.75	0.70	0.40	0.74	**Ounces**

Specifications:		Isol	Circ	Isol	Circ	Isol	Units
Frequency	20.2-21.2	20-30	20-30	20-40	20-40	24-27	**GHz**
Insertion loss	0.45	0.7	0.6 typical 0.7 max	2.0	2.0	0.8	**dB**
Isolation	22	18	20 typical 18 min	10	10	18	**dB**
VSWR	1.20:1	1.40:1	1.35:1 typical 1.40:1 max	2.0:1	2.0:1	1.30:1	
Power AVG Port(1-2)	10	5	2, 5	5	5	10	**Watts**
Power Reflective Term	2	2	-	2		2	**Watt**
Peak Power	50	30	30	30	30	30	**Watts**
Connector	K1	K	K	K	K	K	
Temperature range	-20 to +65	-20 to +65	-20 to +65	-20 to +65	-20 to +65	-20 to +65	**°C**
Weight	0.74	0.90	0.90	0.90	0.90	0.4	**Ounces**

WORLD HQ: 1702L Meridian Ave. Suite 127, San Jose, Ca 95125, U.S.A.
Tel: (408) 266-7404 FAX: (408) 266-4483
WEB: www.raditek.com E-mail: sales@raditek.com

Coaxial Isolator or Circulator, 17.5-41GHz, Split Bands
K (2.9) mm or SMA Connector, 2 Watts

Specifications:	Circ	Cir	Circ	Circ	Isol (3070)	Isol	Isol –M1	Units
Frequency	23.8-24.2	23-25	24.25-26.25	24.0-28.0	24-26	24-26	24-26	GHz
Insertion loss	0.4	0.6	0.6	0.6	0.5	0.5	0.5	dB max
Isolation	22	18	20	20	20	20	25	dB min
VSWR	1.20:1	1.30:1	1.25:1	1.25:1	1.25:1	1.25:1	1.25:1	max
Power AVG Port(1-2)	10	15	2	10	10	10	10	Watts
Power Reflective Term			2		2	2	2	Watt
Peak Power	50	30	30	50	30	30	30	Watts
Connector	SMA(f)	K	SMA	K(f)	K	K	K	
Temperature range	-20 to +65	-20 to +65	-20 to +65	-20 to +65	-30 to +70	-20 to +65	-20 to +65	°C
Weight	0.74	0.75	0.9	0.74	0.9	0.9	0.9	Ounces

Specifications:		Iso	Iso	Iso		Isolator	Units
Frequency	24-32	23-28	24.5-25.5	24.5-27.5	25.50-25.75	25.0-27.5	GHz
Insertion loss	1.0	0.8	0.5	0.5	0.60	0.6 max	dB max
Isolation	17	18	20	18	20	18 min	dB min
VSWR	1.50:1	1.30:1	1.25:1	1.30:1	1.25:1	1.25:1	max
Power AVG Port(1-2)	5	5	10	10	10	5	Watts
Power Reflective Term	2	2	2	2	2	2	Watt
Peak Power	30	30	30	30	30	30	Watts
Connector	K	K	SMA	K	K	K	
Temperature range	-20 to +65	-20 to +65	-20 to +65	-30 to +65	-20 to +65	-20 to +65	°C
Weight	0.4	0.4	0.4	0.7	0.4	0.40	Ounces

Specifications:		Isolator	Circ	Iso	Iso	Circ	Units
Frequency	26-28	25.0-27.5	26-29	26.0-29.0	26-40	26-40	GHz
Insertion loss	0.60	0.6 max	0.60	0.60	1.0	1.0	dB max
Isolation	20	18 min	20	20	14	14	dB min
VSWR	1.25:1	1.25:1	1.25:1	1.25:1	1.50:1	1.50:1	max
Power AVG Port(1-2)	5	5	5	5	5	5	Watts
Power Reflective Term	2	2		2	2		Watt
Peak Power	30	30	30	30	30	30	Watts
Connector	K	K	K	K	K	K	
Temperature range	-20 to +65	-20 to +65	-20 to +65	-20 to +65	-20 to +65	-20 to +65	°C
Weight	0.4	0.40	0.9	0.9	0.4	0.9	Ounces

Specifications:	Isol	Isol	Isol	Isol	Circ	Circ	Isol	Units
Frequency	26.5-32.0	27-30	27-31	27-31	27-31	27.5-28.5	27.0-31.5	GHz
Insertion loss	0.7	0.60	0.60	0.60	0.60	0.60	0.80	dB max
Isolation	20	20	20	20	20	20	20	dB min
VSWR	1.25:1	1.25:1	1.25:1	1.25:1	1.25:1	1.25:1	1.25:1	max
Power AVG Port (1-2)	10	5	5	5	2 (all ports)	5	5	Watts
Power Reflective Term	2	2	2	2			2	Watt
Peak Power	30	30	30	30	30	30	30	Watts
Connector	K	K	K	K	K	K	K	

WORLD HQ: 1702L Meridian Ave. Suite 127, San Jose, Ca 95125, U.S.A.
Tel: (408) 266-7404 FAX: (408) 266-4483
WEB: www.raditek.com E-mail: sales@raditek.com

Coaxial Isolator or Circulator, 17.5-41GHz, Split Bands K (2.9) mm or SMA Connector, 2 Watts

Specifications:	Isol	Isol	Isol	Isol	Circ	Circ	Isol	Units
Temperature range	-30 to +65	-20 to +65	-20 to +65	-30 to +65	-20 to +65	-20 to +65	-20 to +65	°C
Weight	0.7	0.4	0.4		0.9			Ounces

Specifications:	Isol		Isol	Isol	Isol	Isol	Isol	Units
Frequency	27.5-28.5	29.0-40.0	29-31	29.5-31.5	29.75-31.25	29.75-31.25	30-31	GHz
Insertion loss	0.60	1.0	0.50	0.50	0.50	0.60	0.60	dB max
Isolation	20	14	20	20	20	20	20	dB min
VSWR	1.25:1	1.50:1	1.25:1	1.25:1	1.25:1	1.25:1	1.25:1	max
Power AVG Port (1-2)	10	5	10	5	5	10	5	Watts
Power Reflective Term	2	2	2	2	2	2	2	Watt
Peak Power	30	30	30	30	30	30	30	Watts
Connector	K	K	K	K	K	K	K	
Temperature range	-20 to +65	-40 to +70	-20 to +65	-20 to +65	-20 to +65	-30 to +65	-20 to +65	°C
Weight	0.70	0.9	0.4	0.4	0.4	0.7	0.4	Ounces

Specifications:			Isol	Circ	Isol	Circ (-4085)	Units
Frequency	30-32	30-40	31-33	31-33	31-41	32-36	GHz
Insertion loss	1.0	1.0	0.6	0.6	1.0	0.7	dB max
Isolation	17	14	20	20	14	18	dB min
VSWR	1.35:1	1.50:1	1.25	1.25	1.50	1.45:1	max
Power AVG Port (1-2)	5	10	5	5	5	10	Watts
Power Reflective Term	2	2	2		2		Watt
Peak Power	30	30	30	30	30	30	Watts
Connector	K Male	K	K	K	K	K	
Temperature range	-20 to +65	-20 to +65	-20 to +65	-20 to +65	-20 to +65	-40 to +85	°C
Weight	0.4	0.7	0.4	0.9	0.4	0.75	Ounces

Specifications:	Circ	Isol	Isol	Isol	Isol	Isol	Units
Frequency	32-36	32-36	33-34	34-35	34-36	34-36	GHz
Insertion loss	0.7	0.7	0.6	0.6	0.6	0.8	dB max
Isolation	18	18	20	20	20	22	dB min
VSWR	1.30:1	1.30	1.25	1.25:1	1.25	1.25	max
Power AVG Port (1-2)	10	10	5	10	5	10	Watts
Power Reflective Term		2	2	2	2	2	Watt
Peak Power	30	30	30	30	30	30	Watts
Connector	K	K	K	K	K	K	
Temperature range	-20 to +65	-20 to +65	-20 to +65	-30 to +65	-20 to +65	-40 to +80	°C
Weight	0.75	0.7	0.7	0.7	0.4	0.7	Ounces

Specifications:	Circ	Circ	Circ	Circ	Isol	Isol	Units
Frequency	34-36	34-36	34-37	34-40	34-40	34.5-35.5	GHz
Insertion loss	0.6	0.7	0.70	1.0	1.0	0.70	dB max
Isolation	20	20	18	14	14	18	dB min
VSWR	1.25:1	1.25:1	1.35:1	1.50:1	1.50:1	1.30:1	max
Power AVG Port(1-2)	10	5	2	1, 10	5	10	Watts
Power Reflective Term			2		2	2	Watt

WORLD HQ: 1702L Meridian Ave. Suite 127, San Jose, Ca 95125, U.S.A.
Tel: (408) 266-7404 FAX: (408) 266-4483
WEB: www.raditek.com E-mail: sales@raditek.com

Coaxial Isolator or Circulator, 17.5-41GHz, Split Bands
K (2.9) mm or SMA Connector, 2 Watts

Specifications:	Circ	Circ	Circ	Circ	Isol	Isol	Units
Peak Power	30	30	30	30	30	30	Watts
Connector	K	K	K	K	K	K	
Temperature range	-20 to +65	-20 to +65	-20 to +65	-20 to +65	-20 to +65	-20 to +65	°C
Weight	0.75	0.90	0.9	0.9	0.9	0.7	Ounces

Specifications:	Circ	Circ	Isol	Circ	Isol	Circ	Units
Frequency	34.5-35.5	35.3-36.2	37-39	37-40	37-40	38-40	GHz
Insertion loss	0.6	0.6	0.6	0.70	0.7	0.8	dB max
Isolation	20	20	20	18	18	15	dB min
VSWR	1.25:1	1.25:1	1.25	1.35:1	1.35:1	1.45:1	max
Power AVG Port(1-2)	10	10	5	2	5	5	Watts
Power Reflective Term			2	2	2	2	Watt
Peak Power	30	30	30	30	30	30	Watts
Connector	K	K	K	K	K	K	
Temperature range	-20 to +65	-20 to +65	-20 to +65	-20 to +65	-20 to +65	-20 to +65	°C
Weight	0.75	0.75	0.4	0.9	0.4	0.9	Ounces

Specifications:	Isol						Units
Frequency	37.5-38.5						GHz
Insertion loss	0.7						dB max
Isolation	20						dB min
VSWR	1.25:1						max
Power AVG Port(1-2)	5						Watts
Power Reflective Term	2						Watt
Peak Power	30						Watts
Connector	K						
Temperature range	-20 to +65						°C
Weight	0.4						Ounces

WORLD HQ: 1702L Meridian Ave. Suite 127, San Jose, Ca 95125, U.S.A.
Tel: (408) 266-7404 FAX: (408) 266-4483
WEB: www.raditek.com E-mail: sales@raditek.com

Coaxial Isolator or Circulator, 17.5-41GHz, Split Bands
K (2.9) mm or SMA Connector, 2 Watts

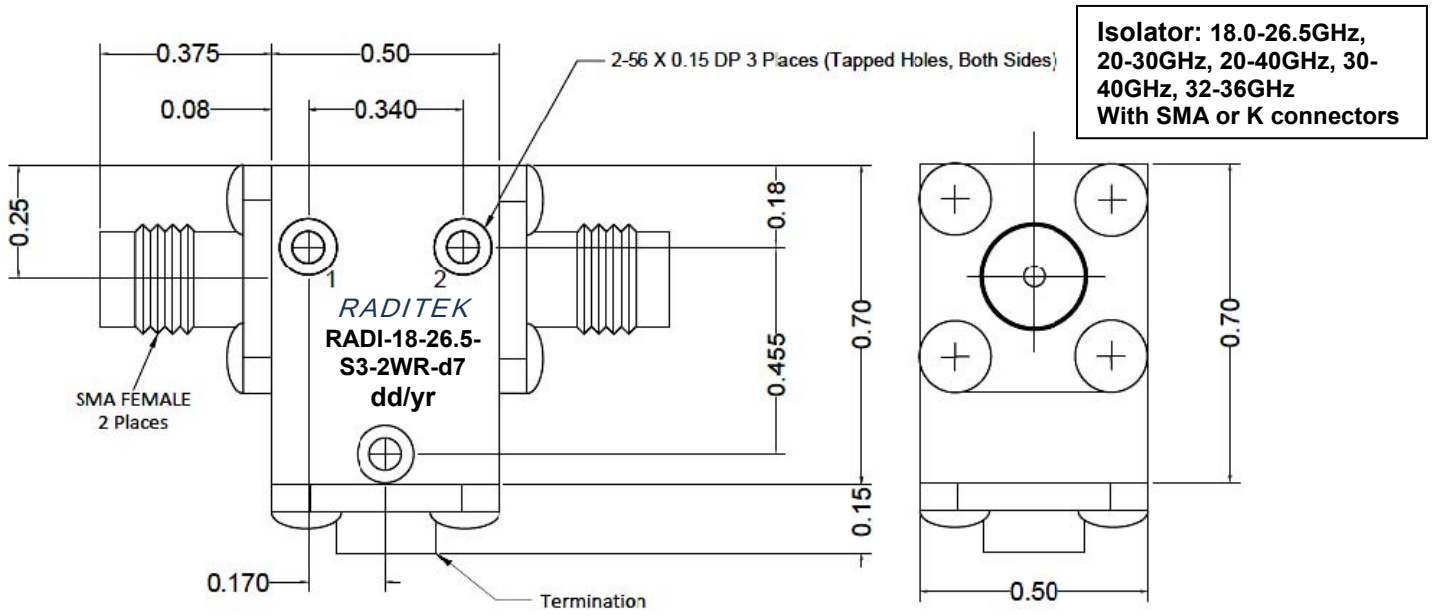

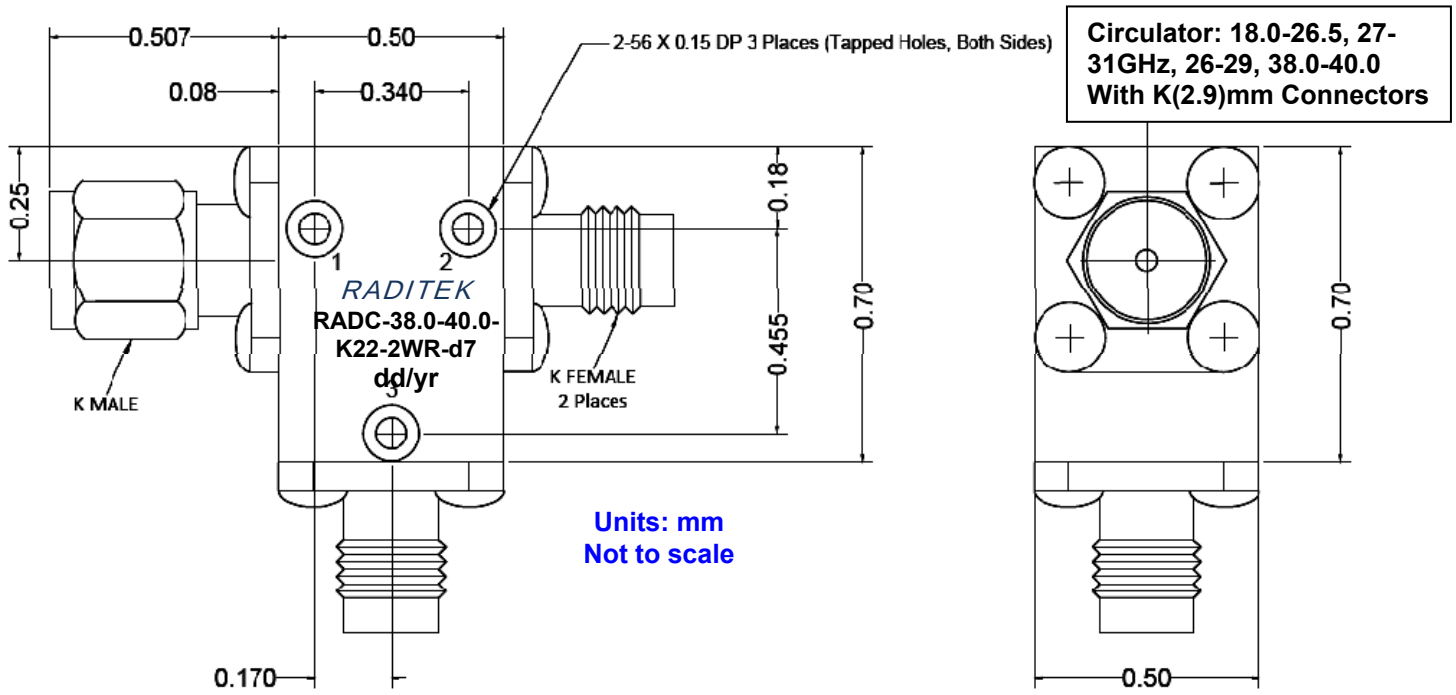

WORLD HQ: 1702L Meridian Ave. Suite 127, San Jose, Ca 95125, U.S.A.
Tel: (408) 266-7404 FAX: (408) 266-4483
WEB: www.raditek.com E-mail: sales@raditek.com

Coaxial Isolator or Circulator, 17.5-41GHz, Split Bands
K (2.9) mm or SMA Connector, 2 Watts

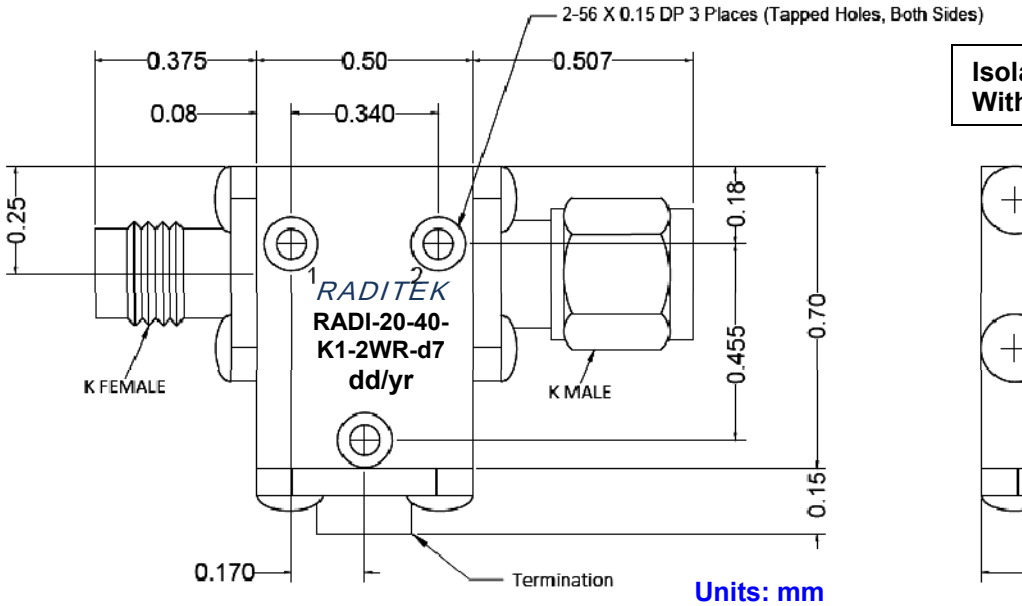

Isolator 20-40, 29.5-31.5GHz, With K(2.9)mm Connectors

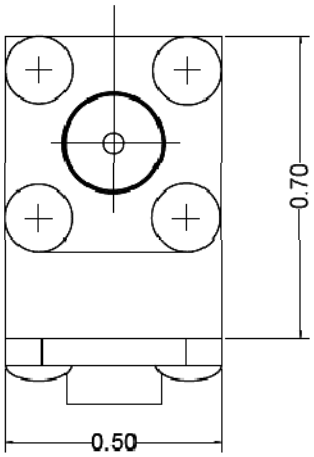

Units: mm
Not to scale

Circulator
18-40, 20-30GHz, 20-40GHz, 23-25GHz, 27-30GHz, 27.5-28.5GHz, 31-33GHz, 34-36GHz, 37-40GHz, With K(2.9)mm connectors

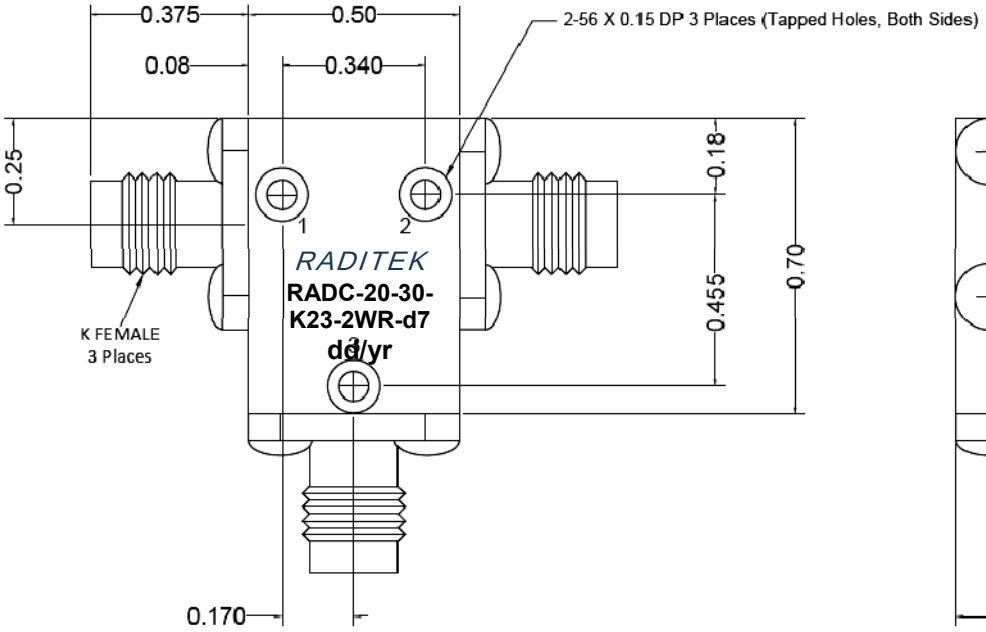

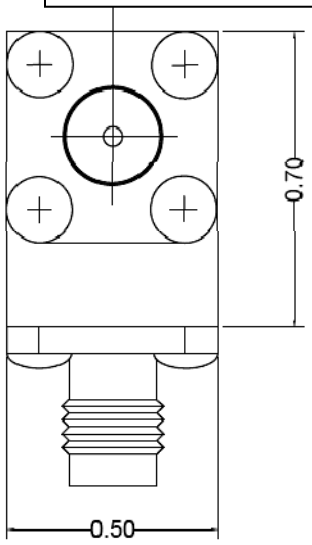

WORLD HQ: 1702L Meridian Ave. Suite 127, San Jose, Ca 95125, U.S.A.
Tel: (408) 266-7404 FAX: (408) 266-4483
WEB: www.raditek.com E-mail: sales@raditek.com

Coaxial Isolator or Circulator, 17.5-41GHz, Split Bands
K (2.9) mm or SMA Connector, 2 Watts

Isolator
27-31GHz, 37-40GHz, With
K(2.9)mm connectors

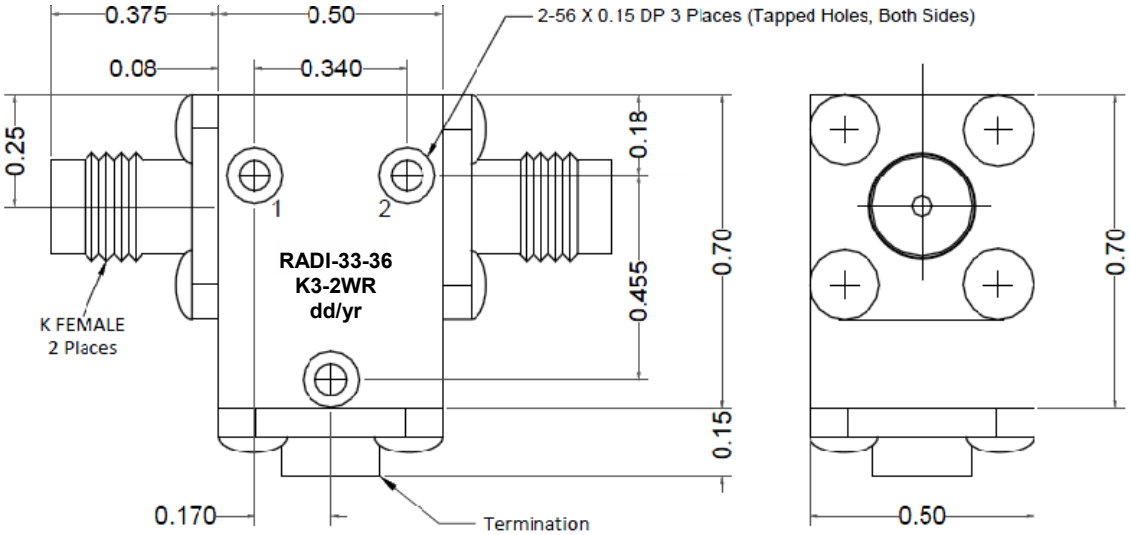

Plots for RADI-17.7-26.5-K2-2WR-d7

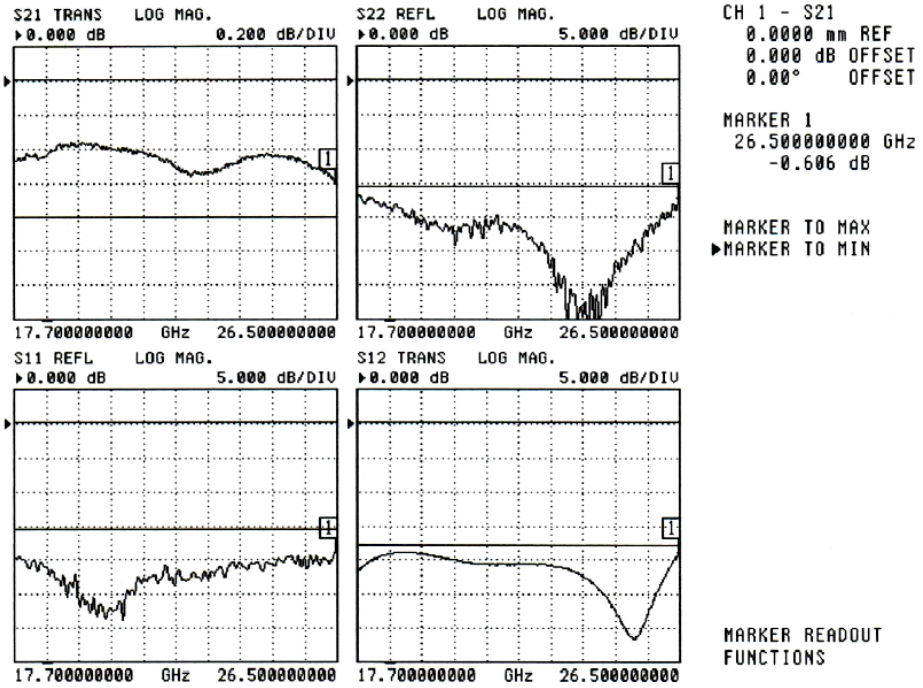

WORLD HQ: 1702L Meridian Ave. Suite 127, San Jose, Ca 95125, U.S.A.
Tel: (408) 266-7404 FAX: (408) 266-4483
WEB: www.raditek.com E-mail: sales@raditek.com

Coaxial Isolator or Circulator, 17.5-41GHz, Split Bands
K (2.9) mm or SMA Connector, 2 Watts

Test data for RADI-27-31-K3-2WR-d7

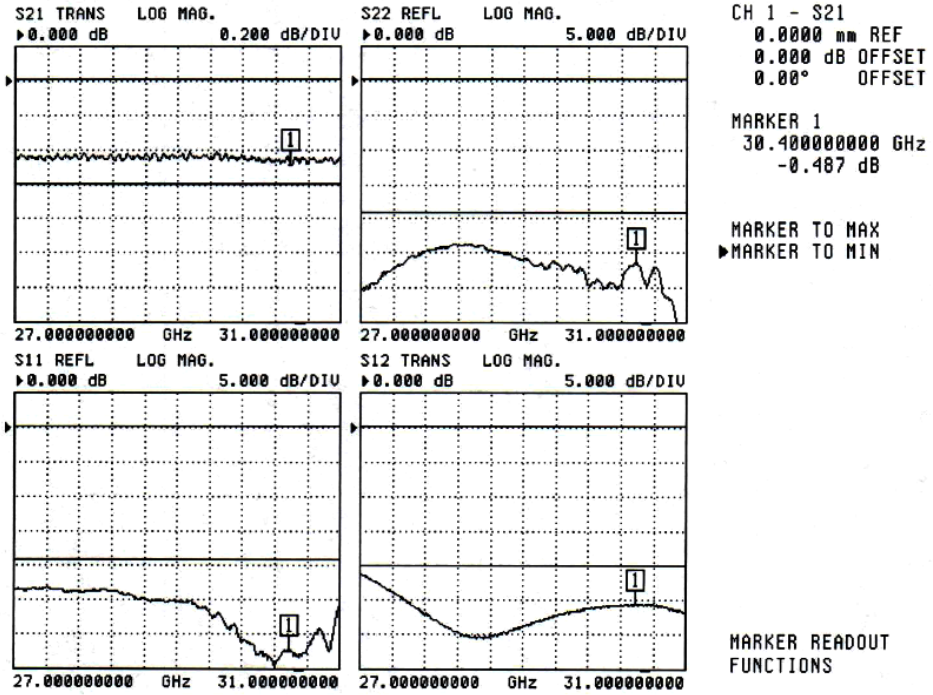

WORLD HQ: 1702L Meridian Ave. Suite 127, San Jose, Ca 95125, U.S.A.
Tel: (408) 266-7404 FAX: (408) 266-4483
WEB: www.raditek.com E-mail: sales@raditek.com